norweco®

SINGULAIR® BIO-KINETIC®

WASTEWATER TREATMENT SYSTEM MODEL 960

SPECIFICATIONS

GENERAL SPECIFICATIONS

The contractor shall furnish and install one complete Singulair Bio-Kinetic wastewater treatment system with all necessary parts and equipment as described in the following specifications. Treatment of the domestic wastewater shall be accomplished by the extended aeration process with non-mechanical flow equalization, pretreatment of the influent and filtration of the final effluent. The treatment system shall provide primary, secondary and tertiary treatment of the wastewater flow, and if required, chlorination and dechlorination of the effluent prior to discharge. All treatment processes shall be contained within reinforced precast concrete tankage meeting the requirements of ACI Standard 318. The wastewater treatment system shall be a Singulair Model 960 as manufactured by Norweco, Inc., Norwalk, Ohio, USA. Systems utilizing fiberglass, steel, or plastic tankage are subject to flotation when dewatered and shall not be considered for this application.

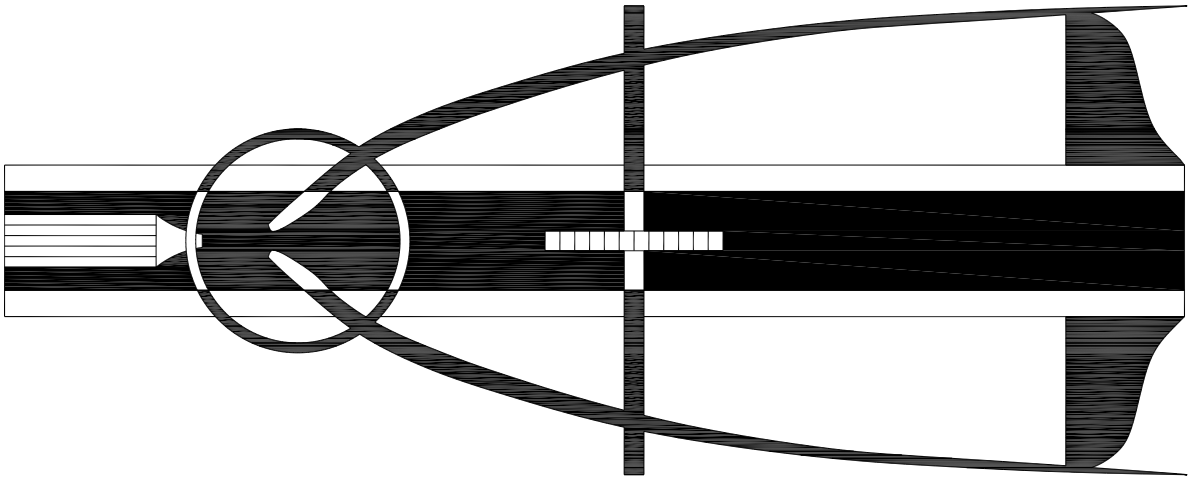

The wastewater treatment system shall include precast concrete tankage providing separate pretreatment, aeration and final clarification chambers. The tankage shall be furnished with cast-in-place inlets, submerged transfer ports, aerator mounting casting with removable cover, cast-in-place molded plastic vent assembly, cast-in-place outlet coupling and Bio-Kinetic system mounting casting with removable cover. Principal items of electro-mechanical equipment supplied with the Singulair system shall be a 1725 RPM mechanical aerator, UL Listed Service Pro electrical control center with MCD technology, Bio-Static sludge return and Bio-Kinetic tertiary treatment device for flow equalization and final filtration of system effluent.

SINGULAIR®

OPERATING CONDITIONS

Total holding capacity of the system shall provide a minimum of 48 hour retention of the daily flow. The pretreatment chamber shall provide at least 18 hour retention, the extended aeration chamber shall provide at least 24 hour retention and the clarification chamber shall provide at least 6 hour retention. The non-mechanical flow equalization device shall increase each individual chamber and total system retention time in direct proportion to loading. Design of the system shall include a compartmented tank and non-mechanical flow equalization device to insure successful treatment performance without upset even when the significant runoff period is six hours. Hydraulic design considerations of the system and flow equalization device shall be such that intermittent peak flow factors as high as four shall not upset hydraulic reliability within the system. Capability of the system to perform as outlined, when built by an approved manufacturer, shall be certified by an independent testing laboratory and approved for use by the local governing regulatory agency.

PRETREATMENT CHAMBER

The pretreatment chamber shall be an integral part of the wastewater treatment system. All domestic wastewater shall be preconditioned and flow equalized while passing through the pretreatment chamber prior to being introduced to the extended aeration chamber. The outlet of the pretreatment chamber shall be equipped with a discharge tee that extends vertically into the liquid so that only the preconditioned equalized flow from the center area of the chamber is displaced to the extended aeration chamber. The discharge tee and transfer port shall be of adequate size to handle a peak flow factor of four without restricting the outlet and disturbing hydraulic displacement to the extended aeration chamber. A removable inspection cover shall be cast into the top of the pretreatment chamber to allow tank and transfer tee inspection. As a safety measure, the uncovered opening shall be small enough to insure that the tank cannot be entered for inspection or service.

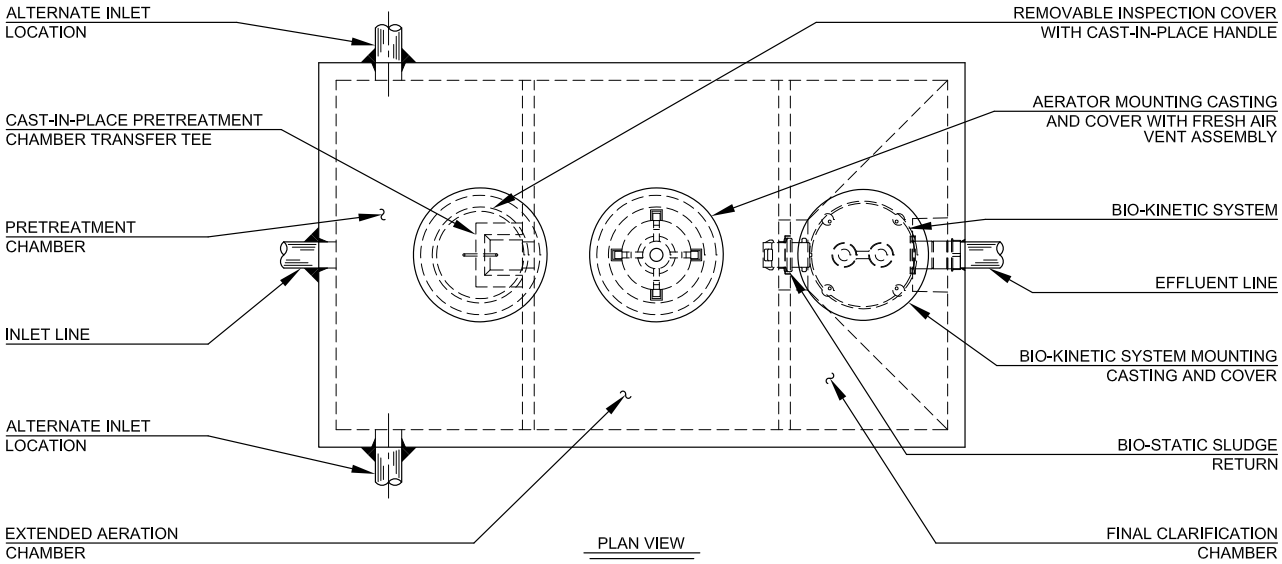

PLAN VIEW

AERATION CHAMBER

The extended aeration chamber shall provide in excess of 24 hour retention of the equalized daily flow. The chamber shall be of sufficient size to provide a minimum of 80 cubic feet of tank capacity per pound of applied BOD. The aeration chamber length-width-depth ratio shall be designed to insure uniform tank mixing and provide optimum treatment. The aeration chamber(s) shall be an integral part of the system flow path and constructed of properly reinforced 5,000 PSI, 28 day compression strength precast concrete. All castings used to construct the precast concrete tankage shall be monolithic units with external and internal walls incorporated into each section.

FINAL CLARIFICATION CHAMBER

The final clarification chamber shall consist of 5 functionally independent zones operating together to provide satisfactory settling and clarification of the equalized flow. An inlet zone shall be provided and shall dissipate transfer turbulence at the flow inlet of the clarification chamber. Its performance shall also eliminate turbulence in other zones of the clarifier. Liquid shall be hydraulically displaced from the inlet zone to the sludge return zone. Hydraulic currents shall sweep settled sludge from the hoppered walls and return these solids via the inlet zone to the aeration chamber. As solids are removed, liquid is displaced to the hopper zone of the clarifier. In this zone, settling by gravity takes place. Three of the four sidewalls are slanted to form a hopper which directs all settled material back to the sludge return zone. Clarified liquid from the hopper zone shall be displaced into the final settling zone to provide additional clarification of the liquid. The liquid is finally displaced to the outlet zone for final filtration and discharge from the system. Non-mechanical equalization of the flow, through all 5 independent zones, shall provide optimal settling and clarification.

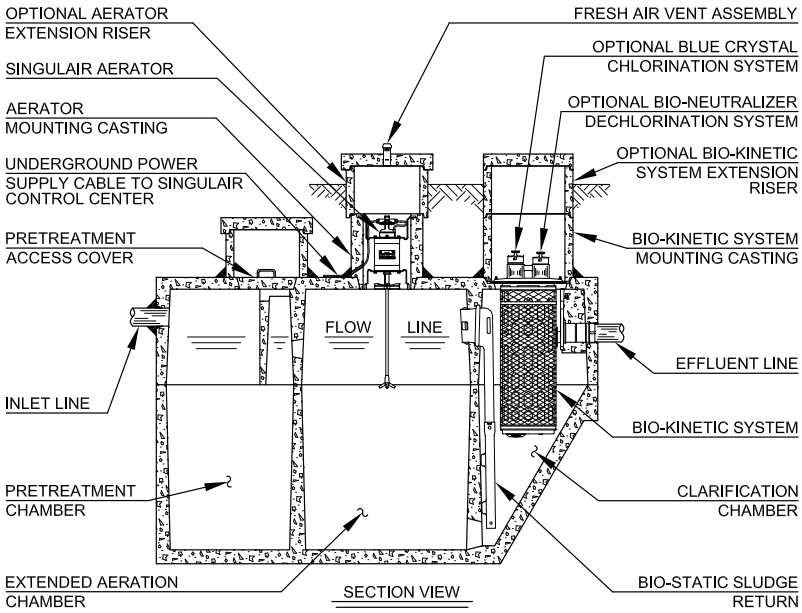

BIO-STATIC® SLUDGE RETURN

A Bio-Static sludge return shall be installed into the cast-in-place opening(s) in the aeration/clarification chamber wall to provide positive return of settled solids. Aeration chamber hydraulic currents shall enter the sludge return(s) and be directed into the sludge return zone of the clarification chamber. The Bio-Static sludge return shall accomplish resuspension and return of settled solids without disturbing the clarified liquid in the final settling zone and outlet zone.

MECHANICAL AERATOR

Each Singulair aerator shall be installed in a concrete aerator mounting casting above the aeration chamber. Fresh air shall be supplied through a molded plastic vent assembly cast into the concrete access cover above the aerator. The Singulair aerator shall include plated mounting brackets, NEMA 6 rated electrical connector, UL recognized fractional horsepower motor, molded plastic lifting handle, molded plastic air intake screens, molded plastic foam restrictor, stainless steel aspirator shaft and molded glass-filled nylon aspirator tip. The motor shall contain precision manufactured o-ring type seals installed between the motor shell and the machined aluminum endbells to insure watertight integrity is maintained. Molded Viton elastomer shaft seals shall be utilized to protect the bearings from contamination. Only the stainless steel aspirator shaft and glass-filled nylon aspirator tip shall be installed in contact with the liquid. There shall be no submerged electrical motors, bearings or fixed air piping in the aeration system. Singulair aerator motors shall be designed not to exceed the motor nameplate rating when installed and operated as recommended for the system. The fractional horsepower aerator motor shall be equipped with a foam restrictor to protect the motor against high water and foam. The motor shall be 4 pole, 1725 RPM, 115 volt, 60 Hertz, single phase, ball bearing constructed with a 1.0 service factor. It shall draw less than 4.0 amps when operating at the rated nameplate voltage. Aerator motors without UL recognition have not demonstrated compliance with international electrical standards for safety and reliability and shall not be considered for this application.

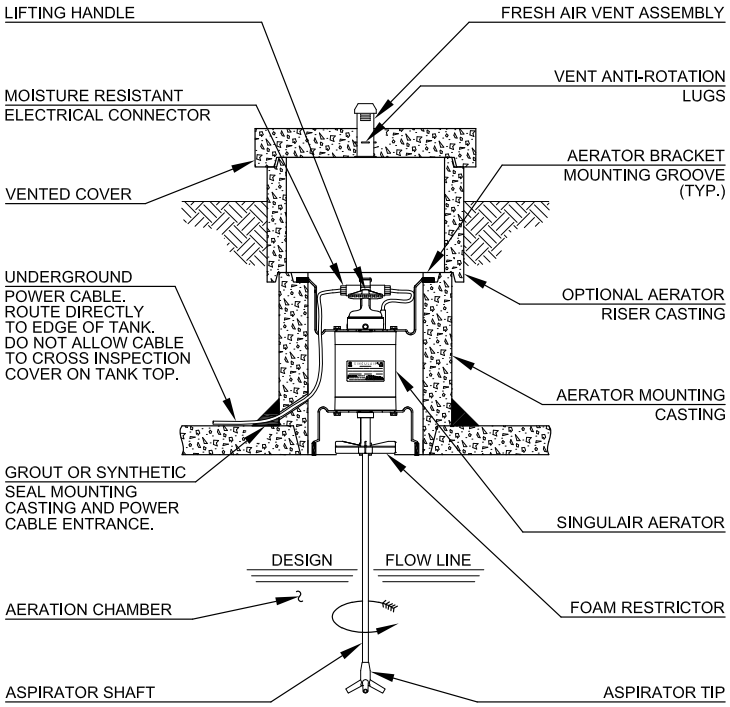

BIO-KINETIC®

SERVICE PRO® ELECTRICAL CONTROL CENTER

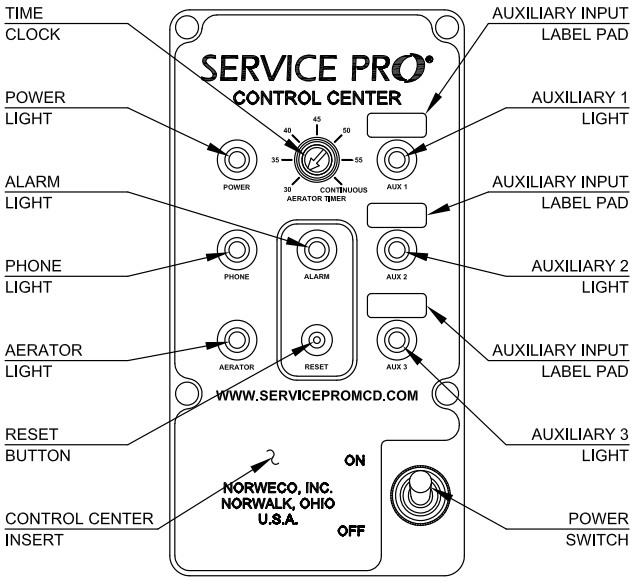

The Service Pro electrical control center with MCD technology shall provide Monitoring, Compliance and Diagnostic functions for the Singulair treatment plant using a microprocessor based platform. The Service Pro control center shall contain nonvolatile memory to prevent loss of programming in the event of a power failure. The pre-wired controls shall be mounted in a lockable NEMA rated enclosure designed specifically for outdoor use. Each Service Pro control center shall be a UL Listed assembly and shall include a time clock, alarm light, reset button, power switch, power light, phone light, aerator alarm light and three auxiliary alarm lights. The control center shall monitor all treatment system operating conditions including aerator over current, aerator under current and open motor circuit. In the event the control center detects one of these conditions, power to the aerator shall be interrupted, a diagnostic sequence shall begin and the visual alarm shall activate. After a programmed recovery interval, an automatic restart attempt shall be initiated. If normal aerator operation does not resume during 24 programmed recovery and restart cycles, the audible alarm shall activate and the telemetry system shall report the specific condition to the Service Pro monitoring center. In the event that any of the auxiliary inputs detect abnormal operation of the treatment system auxiliary equipment, the audible and visual alarms shall immediately activate and the telemetry system shall report the alarm condition to the monitoring center. The service provider shall automatically be notified by the Service Pro monitoring center of the specific alarm condition using phone, fax or email.

TIME CLOCK

The aerator run cycle shall be controlled by an adjustable, pre-wired time clock. The minimum setting shall not permit the aerator to be “off” for more than 30 minutes per hour. It shall be adjustable in 5 minute increments and designed such that any adjustment results in additional run time up to “continuous” operation (60 minutes per hour). Use of a time clock can seriously affect system performance and operating cost. Systems that have not been performance certified at the minimum time clock setting by an independent testing laboratory shall not be considered for this application.

www.servicepromcd.com

SERVICE PRO® MONITORING CENTER

The Service Pro monitoring center shall include a 128 bit encrypted password protected website for interface with the monitoring center database. Access to the secure website shall be obtained through a unique user name and password that provides tiered access to data from monitored treatment systems. Access level tiers shall include distributors, service providers, regulatory agencies and individual system owners. Distributors and service providers shall be able to create accounts, maintain service records and grant regulatory agencies access to the information. Individual system owners shall be able to view information regarding their own systems, as well as download instructional information. Integrity of stored data shall be maintained through the use of multiple servers operating in geographically isolated locations.

SPECIFICATIONS

BIO-KINETIC® SYSTEM

A Bio-Kinetic system shall be installed in the mounting casting(s) above the clarification chamber. Each Bio-Kinetic system shall provide non-mechanical flow equalization through all plant processes including pretreatment, aeration, clarification, tertiary filtration, chlorination and dechlorination. The assembly shall be supplied with locking lugs and removable moisture/vapor shield and shall consist of a design flow and peak flow micronically molded filter, baffled perimeter settling zone, flow distribution deck, lifting handles, level indicator, adjustment lugs, optional chlorination feed tube, unbaffled perimeter settling zone, solids contact zone, vertical inlet zone, compartmented settling zone consisting of 42 baffled chamber plates, effluent stilling well, final discharge zone, adjustable outlet weir, optional dechlorination feed tube, outlet zone and gasketed discharge flange. All components shall be manufactured from inert synthetic materials or rubber, assembled in circular fashion and connected to a plastic outlet coupling. The outlet coupling shall accept a 4" diameter, Schedule 40, PVC pipe. Each Bio-Kinetic system shall be installed with the inverts of the design flow equalization ports located at the normal liquid level of the clarifier. If intermittent flow rates exceed the capacity of the design flow ports, flow shall be held upstream until the intermittent flow dissipates. If the intermittent flow continues to increase, the liquid level may reach a pair of sustained flow equalization ports. With four ports in use, flow through the system increases while continuing to provide flow equalization to all upstream and downstream processes. Peak flow equalization ports are supplied but should not be required in a properly sized system. Optional Blue Crystal and Bio-Neutralizer tablet feed tubes shall be positioned such that the flow-activated chemical cannot make contact with the liquid upstream of the feed tubes.

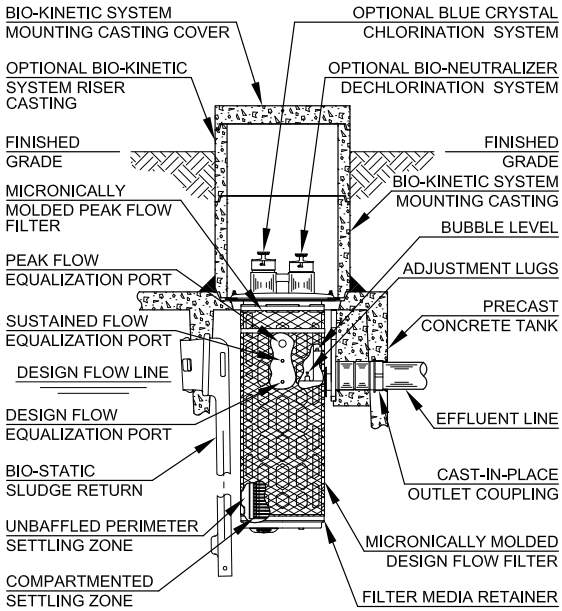

FLOW EQUALIZATION

The wastewater treatment system shall include a non-mechanical, demand use, flow equalization device. The device shall control normal residential flow rates and reduce typical residential flow surges. The flow equalization rate shall be dependent upon the specific loading pattern and the duration of flow surges. At the 600 gallon per day NSF Standard 40 design loading schedule, minimum performance of the device shall equalize daily flow an average of 50%.

BLUE CRYSTAL® CHLORINATION SYSTEM (Optional)

The Singulair system shall be furnished complete with a tablet feeder and a six month supply of Blue Crystal disinfecting tablets. Blue Crystal tablets shall be specifically formulated for consistent chlorine dosage and effluent disinfection to the sustained, variable and intermittent flows that are typical of domestic wastewater treatment systems. The tablets shall be manufactured from pure calcium hypochlorite and contain a minimum of 70% available chlorine. Each tablet shall be $2^{5}/_{8}$" diameter, compressed to a 1" thickness, weigh approximately 5 ounces and be white in color with blue crystals for easy identification. The tablets shall dissolve in direct proportion to the flow rate, releasing controlled amounts of chlorine.

BIO-NEUTRALIZER® DECHLORINATION SYSTEM (Optional)

The Singulair system shall be furnished complete with a tablet feeder and a six month supply of Bio-Neutralizer dechlorination tablets. The dechlorination tablets shall contain active ingredients specially formulated to chemically neutralize both free and combined chlorine. Each tablet shall be $2^{5}/_{8}$" diameter, compressed to a $^{13}/_{16}$" thickness, weigh approximately 5 ounces and be green in color for easy identification. The tablets shall dissolve slowly, releasing controlled amounts of chemical for the instantaneous removal of residual chlorine from the system effluent.

WARRANTY AND EXCHANGE PROGRAM

The manufacturer shall provide a three year limited warranty for each Singulair aerator, Service Pro control center and Bio-Kinetic system purchased from the manufacturer. A comprehensive exchange program offers Singulair owners a lifetime of equipment protection. The distributor shall provide warranty and exchange program details to the regulatory agency, contractor and customer as required.

norweco Lifetime 3 Year Limited Warranty | Lifetime Exchange Program

EQUIPMENT MANUFACTURER

The equipment specified herein shall be the product of a manufacturer having a minimum of seven years experience in the construction of prefabricated wastewater treatment equipment and systems. Bids shall be prepared on the basis of the equipment and material specified herein for purposes of determining the low bid. This is not done, however, to eliminate other products or equipment of equal quality and efficiency. If equipment is to be substituted, approval of such substitution must be made prior to execution of any order. It is assumed that substitution will result in a reduction of cost to the contractor and that if accepted, these savings will be passed along by a reduction in the base bid.

SINGULAIR® MODEL 960 DATA CHART

Designation: Model 960-	500 GPD	750 GPD	1000 GPD	1250 GPD	1500 GPD
Daily Treatment Capacity (Gallons Per Day)	500/600	750/800	1000	1250	1500
Total System Capacity (Gallons)	1300	1600	2300	2850	3400
Number of Singulair Aerators	1	1	2	2	2
Number of Bio-Kinetic Systems	1	2	2	3	3
Number of Bio-Static Sludge Returns	1	1	1	2	2
Drawing Number (PC-5-)	7006	7007	7008	7009	7010

PROGRESS THROUGH SERVICE SINCE 1906

norweco®

Engineering the future of water and wastewater treatment

220 REPUBLIC STREET
NORWALK, OHIO, USA 44857-1156
TELEPHONE (419) 668-4471
FAX (419) 663-5440
www.norweco.com

DISTRIBUTED LOCALLY BY:

A.J.FOSS INC.

Norweco®, Norweco.com®, Singulair®, Modulair®, Travalair®, Singulair Green®, Lift-Rail®, Microsonic®, Bio-Dynamic®, Bio-Sanitizer®, Bio-Neutralizer®, Bio-Kinetic®, Bio-Static®, Bio-Gem®, Bio-Max®, Bio-Regeneration®, Bio-Perc®, Blue Crystal®, ClearCheck®, ChemCheck®, Service Pro®, Grease Buster® and "BUSTER" logo® are registered trademarks of Norwalk Wastewater Equipment Company, Inc.

©MMX NORWECO, INC.